SRA350A

ROUGH TERRAIN CRANE

- 35 USt (32 Mt)
- 114.8 ft (35 m)
- 176 ft (53.6 m)

SANY





WHY SANY ROUGH TERRAIN CRANES?

STRENGTH. RELIABILITY. PERFORMANCE.

SANY's rough terrain cranes have outstanding capacity to perform on a jobsite no matter the challenge or time of day. Operators appreciate the level of simplicity, comfort, high visibility and control at their fingertips. Technicians like the on-board diagnostics system which allows them to address an issue at the source right away so they can have the machine back up and working faster. Less downtime means more work gets done. Like all SANY cranes, they come loaded with all the standard features you need and are backed by the industry's strongest standard warranty. That's 3 years or 3,000 hours of proven reliability.

INDUSTRY'S STRONGEST STANDARD WARRANTY | 3-YEAR* 3,000 HOURS

*Warranty applies to 2026 Crane models only.

MODEL
SRA350A

MAX CAPACITY
35 USt

BOOM LENGTH
114.8'

JIB LENGTH
30.2' - 52.5'

MAX TIP HEIGHT
176'

PROUDLY MADE FOR AMERICA

Since 2006, SANY America has been investing in and growing across the U.S. From our 272-acre facility in Georgia, where we employ over 300 American employees, to our growing dealer network that stretches from Maine to Washington, SANY America is dedicated to building business across America.

Our industry-leading warranty is proof of SANY's durability. Through our local service network SANY proudly shows continuous support to our machines and the people who operate them. SANY America is dedicated to helping American-owned businesses thrive with our commitment to value, performance and service.

SANY's 35 UStonrough terrain crane with four-section 114.8-foot full power boom, features strong capacity with reduced self-weight.



SRA350A

DESIGNED TO DOMINATE THE JOBSITE

SANY builds some of the most durable and reliable cranes in the world. That's design validation at the highest level working to increase the overall longevity of your machine. Beyond reliability and durability, we focus on the operator's experience. So we gave the LMI a large, touchscreen monitor which is easier and more intuitive to navigate. Then we focused on spaciousness, visibility, and climate control. This cab will keep them cool in the hottest days of summer and warm in the cold days of winter. They have high visibility of the jobsite day and night with a tiltable cab, wide windows and multiple cameras.

WE'VE GOT YOUR BACK

To provide peace of mind and ensure maximum uptime, SANY backs all its equipment with robust standard warranties. That's our commitment to keeping your fleet running at peak performance. Our network of local dealers will partner with you for routine maintenance and be there for warranty repairs. You can trust SANY to keep you moving, year-round.

INDUSTRY'S STRONGEST STANDARD WARRANTY | 3-YEAR 3,000 HOURS



PERFORMANCE

With a long boom, strong winches, and strong charts that are best in their class, we made sure operators have what they need to work at peak performance all day long.

COMFORT

The roomy, temperature-controlled cabs have intuitive controls and high visibility. They are designed to keep operators comfortable, alert and engaged.

POWER

Cummins engines, robust and reliable powertrains, and trusted hydraulic components round up the power trifecta.

CONTROL

From high visibility of the jobsite and controls that are designed to be ergonomic and easy to use to an advanced LMI system that gives them critical information without having to dig through menus, operators have everything they need right in front of them to maintain control of the work and the site.

STRENGTH

SANY's heavy-duty body, outriggers and counterweight keep the crane stable when the greatest strength and rigidity is needed.

INDUSTRY-LEADING WARRANTIES

To provide peace of mind and ensure maximum uptime, SANY America's rough terrain cranes are backed by a 3-year/3,000-hour industry-leading standard warranty.

SUPPORT

SANY's crane dealer network is growing as we seek to provide dealerships across America for local service and maintenance. Including in-house support, parts, and field technicians.

COMPONENT BRANDS

Cummins · DANA · MERITOR · RopeBlock

THE SMOOTH, PRECISE CONTROL COMES STANDARD

Inside and out, this cab has been designed to improve the operator experience. The temperature is controlled so operators are always comfortable working throughout the day with enough space to move. Ergonomic, modular and highly efficient controls are well placed. With the use of icons, buttons on the control panels are easy to understand. The controls have good feedback and movement is precise. The LMI in this crane is something SANY is particularly proud of and we think it's the best in the industry—it's unquestionably the most operator-friendly.

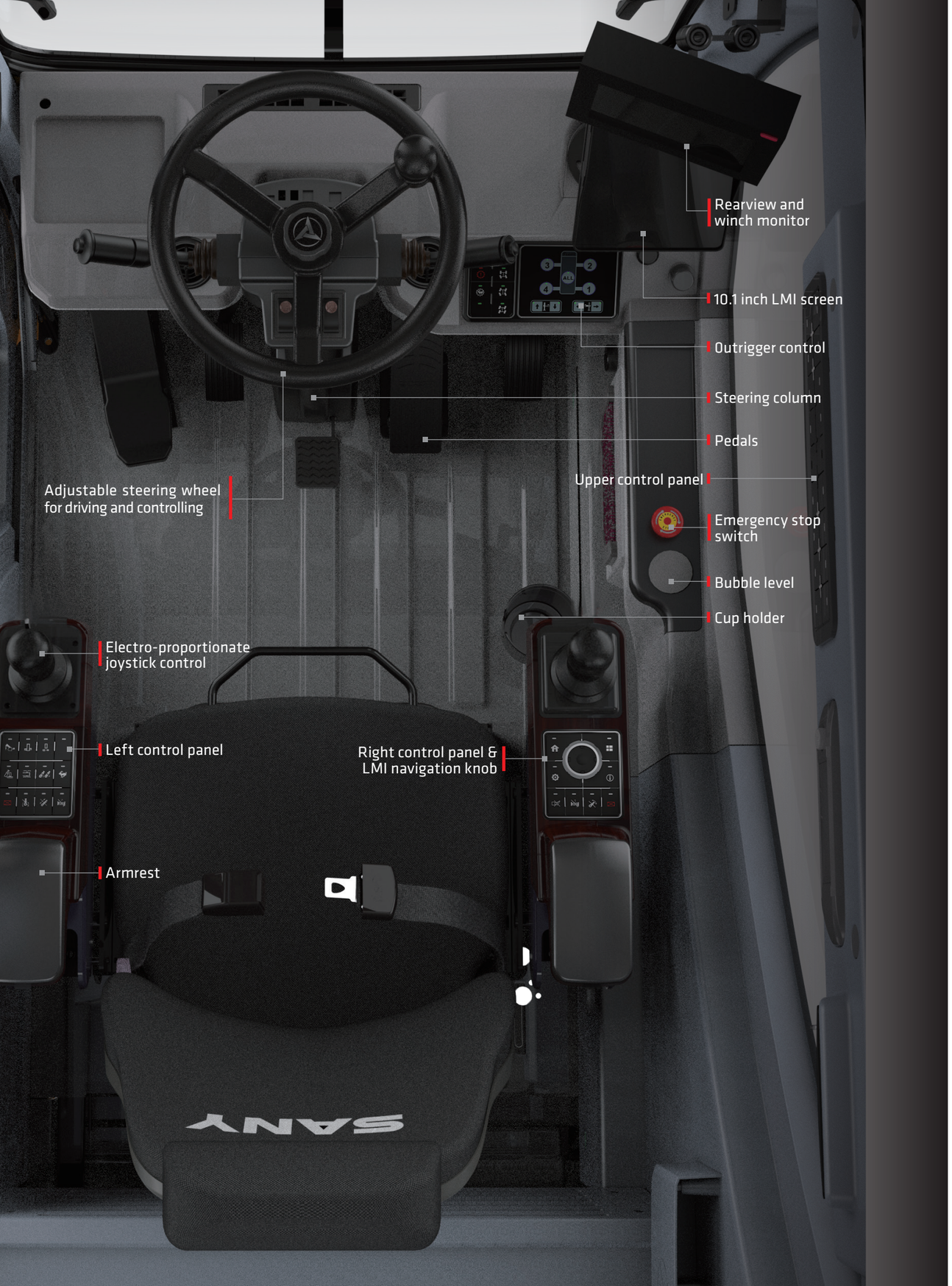

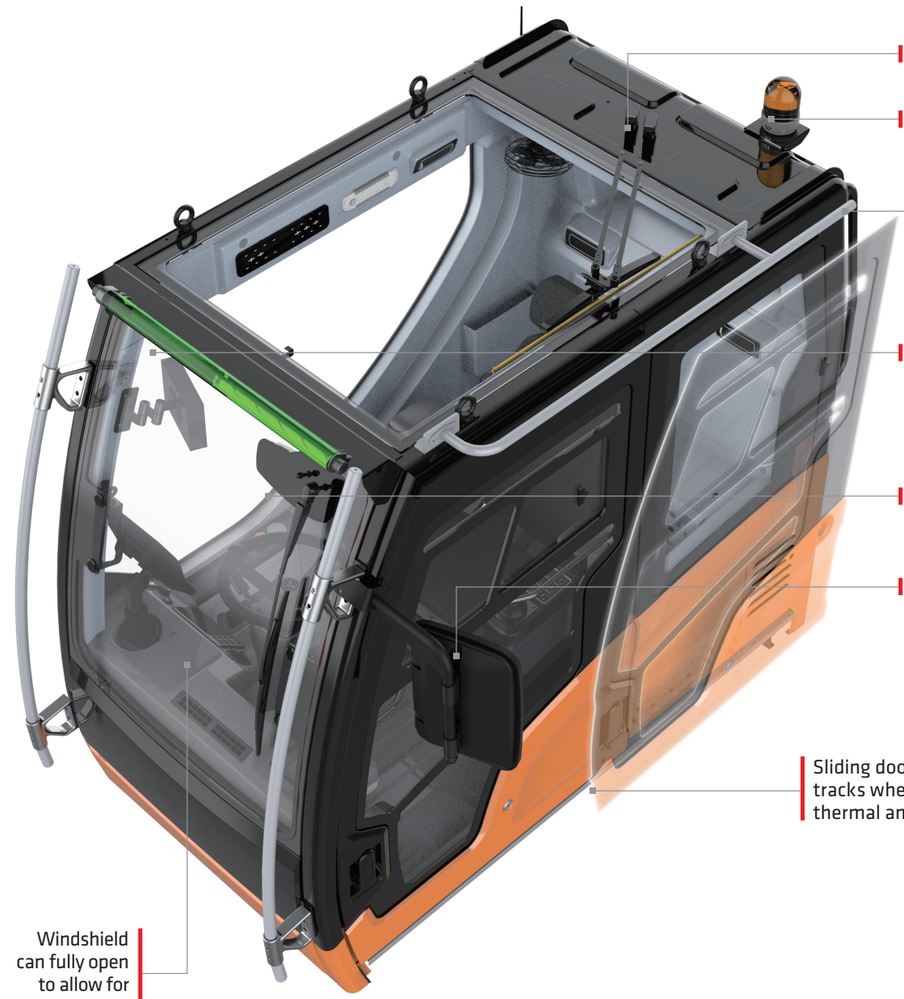

Safety & Reliability | **Comfort & Convenience** | **Simplicity & Efficiency**

THE MOST MODERN & OPERATOR-FRIENDLY LMI IN THE INDUSTRY

Multi-functional touchscreen
The large 10.1 inch HD touchscreen display incorporates crane setup, working conditions, working period, virtual wall, and diagnostics with an additional navigation knob for convenience.

Precise Load Moment Indicator (LMI)
SANY's LMI exceeds load accuracy standards.

More pictorial, less menus
LMI navigation just went to the next level. No need to dig through archaic looking menus trying to find critical information or functionality. No language barriers here, because there's rarely a need for language at all. The LMI is very pictorial which allows operators to easily get to the information they need typically in less than three clicks.

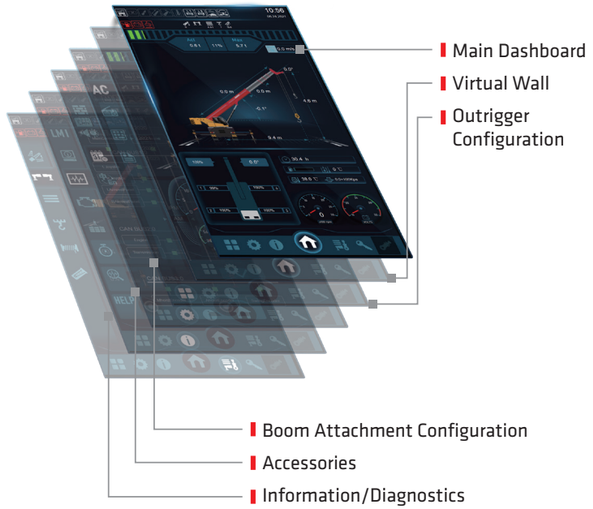

Main Dashboard



Virtual Wall



Outrigger Configuration



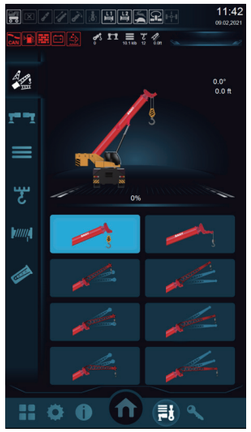

Boom Attachment Configuration



Accessories

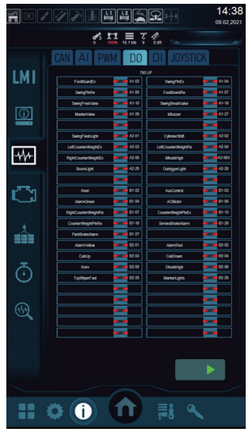

Information/Diagnostics

Outstanding screen clarity
Operators have a crisp, clear viewing screen at all times. It's well lit and low glare which makes navigating this LMI even easier any time of day.

True on-board diagnostics
These advanced diagnostics can even solve an issue down to the wire number. Having critical diagnostic data when you need it means technicians save time problem solving and move right to the solution.

Adjustable steering wheel for driving and controlling, modular control panels, and smart user interface deliver intuitive and highly efficient control.

HYDRAULIC SYSTEM

The SRA350A has a four section, full power synchronized telescoping boom. The boom extends and retracts by single cylinder with wire rope and pulleys.

Superstructure

The SRA350A has an open-type electronically controlled load-sensing system and dynamic swing brake system.

With the dynamic swing brake, the crane can realize precise control of the swing speed.

The electro-proportional, compensated, passive luffing-down system is applied to control the luffing speed, making luffing more reliable and stable.

Ensuring easy operation, it has an electronically controlled load-sensing hydraulic system, electronic joystick and electronic throttle.

Chassis steering system

A gear pump is installed to supply oil for hydraulic steering. The steering pressure is controlled by an electro-proportional relief valve. The four steering modes are controlled by multiple solenoid directional valves.

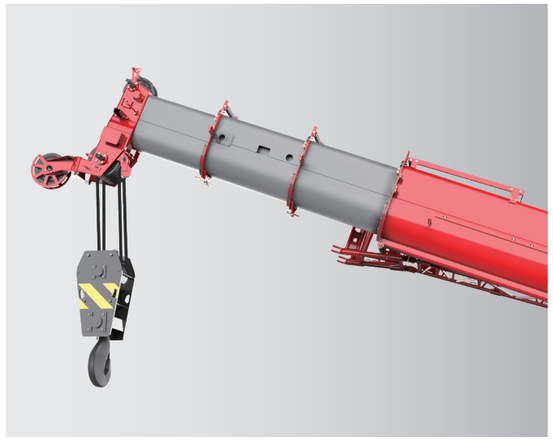

Outrigger telescoping system

This user friendly system with a single finger control pad has built-in outrigger position sensing with and real time position on the LMI screen. The electro proportional relief valve identifies pressure staging of outrigger telescoping, satisfying operation requirements under high pressure and forming protection under limited pressure.

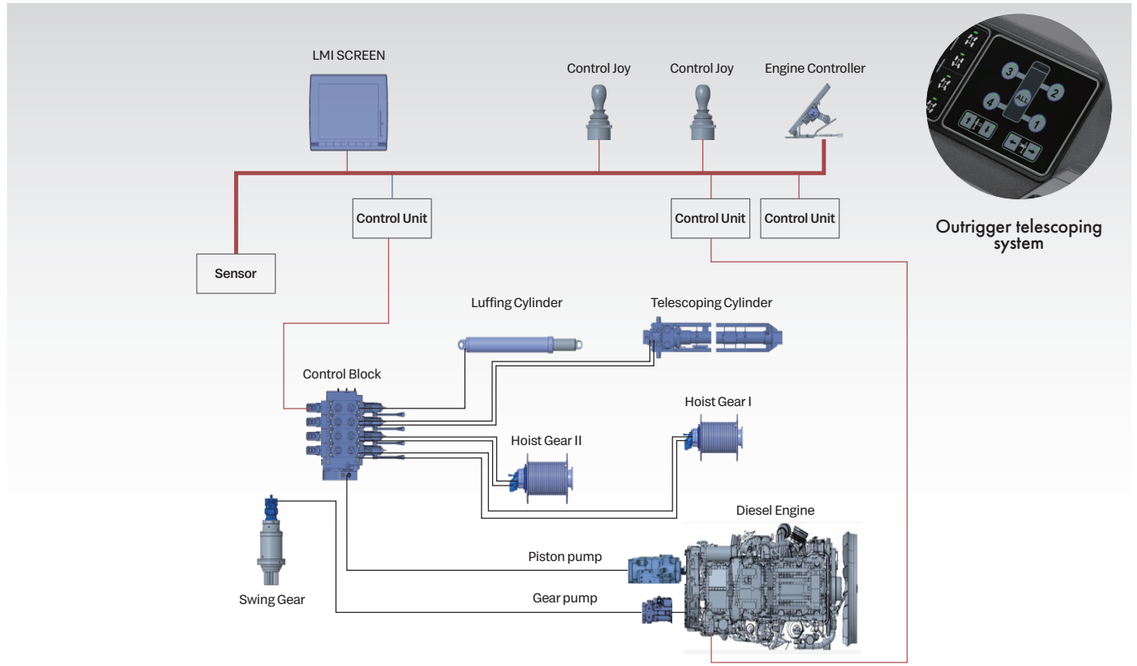

Outrigger telescoping system

SYSTEMS, FEATURES & TRUSTED COMPONENTS

The smooth operation and reliability of our cranes is in part due to the seemless design integration of our different component systems. We followed that up with on-baord diagnostics to show electrical inputs/outputs, hydraulic pressure readings, and multiple CAN-BUS modules for problem isolation.

JIB SETUP VIA REMOTE CONTROL



Hydraulic power assisted jib deployment can be handled by one person with the use of remote controller.

The fly jib gives the crane an extra tip height of 176 feet.

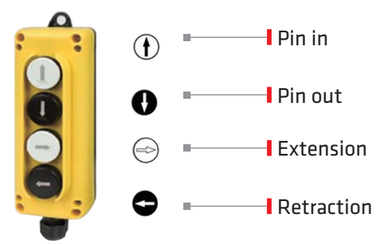

Remote controller

- Pin in
- Pin out
- Extension
- Retraction

ELECTRICAL SYSTEM

Smart CAN-BUS communication system

International advanced CAN-BUS data communication network applied for display, instrument panel, I/O module, joysticks and main sensors, allowing for high-speed data transmission and quick response in less than 20ms.

Cabling

Centralized electric cabinet and heavy-duty connector applied for cabling of superstructure, convenient for maintenance; IP rating up to 67, ensuring high reliability.

Cameras

Winch cameras equipped for monitoring its working condition, as well as a backup camera and right side swing camera.



Centralized electric cabinet



Anti-two-block limit switch



Third wrap indicator



Cable reel



Anemometer

CARRIER FRAME



Inverted trapezoidal variable cross section frame is 5% less in weight and 10% stronger in rigidity.

POWER TRAIN

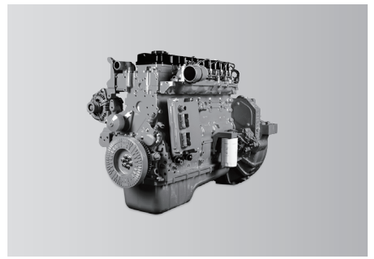

Engine

Power comes from a Cummins B6.7 inline six-cylinder water-cooled, turbocharged and intercooled off-highway diesel engine, complying with Stage V emission standards.

Rated power: 280 hp/2,200 rpm
Max. torque: 950 lb·ft/1,500 rpm

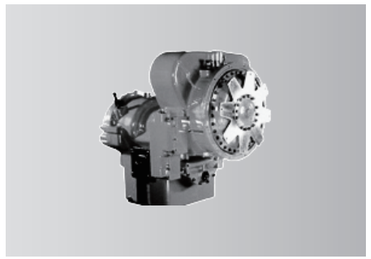

Transmission

Dana electronically controlled auto transmission features 6 speeds forward and 3 speeds reverse, wide ratio range, and smooth gearshift with reduced maintenance cost.

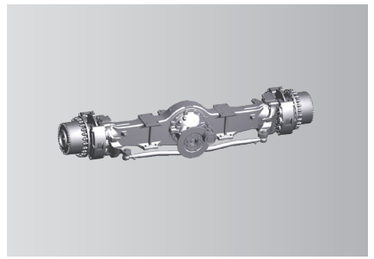

Axle and suspension

Meritor axles, both axles are driven and steered. Front axle is mounted to the frame by independent steel plate, and rear adopts oscillation cylinders with hydraulic lock-out. Driving comfort and lateral stability is therefore guaranteed on rough terrains and conditions.

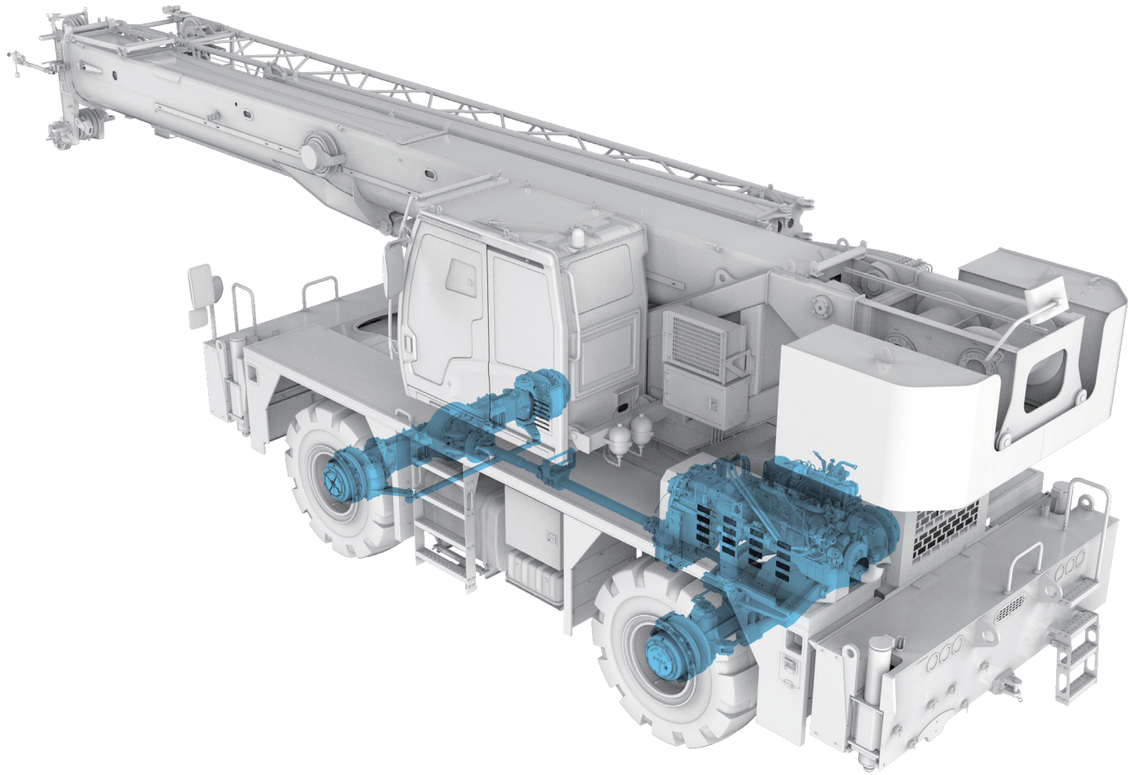

CONVENIENT TRANSPORT

Four steering modes:

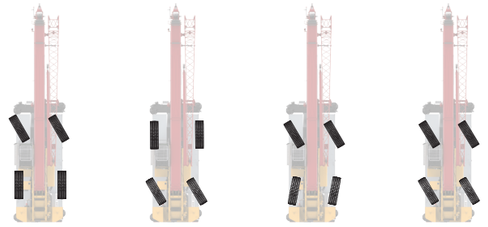

2 wheel front
2 wheel rear
4 wheel
Crab



Steering control panel

One-Trailer Transport

Crane fully equipped transports at 68,000 lbs. Overall transport height 11.75 ft.



Axle Load Distribution

Items	IN POUND			IN KG		
	GVW	Front	Rear	GVW	Front	Rear
Axle load	68,000	33,000	35,000	30,844	14,970	15,876
Remark	Base machine, aux. lifting sheave, main & aux. winches with wire ropes, bi-fold fly jib, 35 USt hook block, 5 USt hook ball.					

TRANSPORT, DIMENSIONS AND TECHNICAL SPECS

OVERALL DIMENSIONS

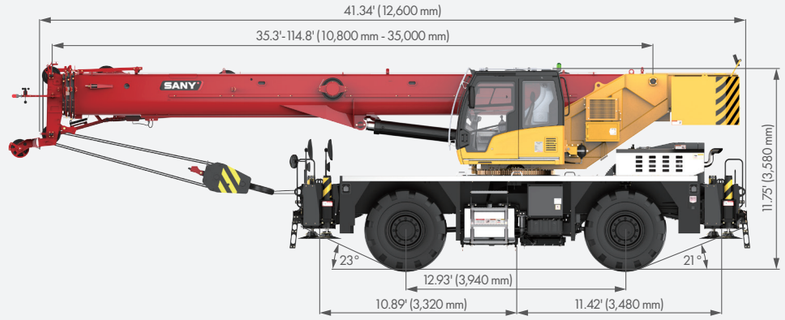

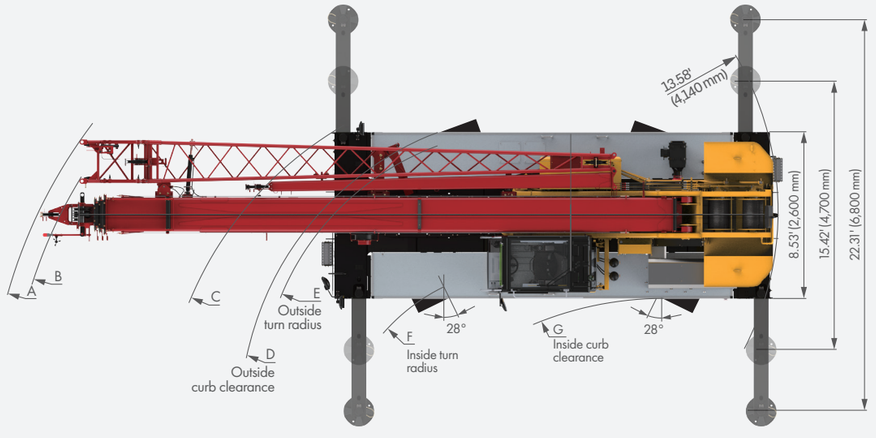

TWO-WHEEL STEER	A	B	C	D	E	F	G
	42.65'	42.32'	32.15'	29.53'	28.54'	31.82'	17.06'
	13m	12.9m	9.8m	9m	8.7m	9.7m	5.2m
FOUR-WHEEL STEER	A	B	C	D	E	F	G
	32.81'	31.50'	18.70'	15.75'	14.76'	15.42'	4.92'
	10m	9.6m	5.7m	4.8m	4.5m	4.7m	1.5m

TECHNICAL SPECIFICATIONS

CATEGORY	ITEM		UNIT	VALUE
CAPACITY	Max. lifting capacity		USt (Mt)	35 (32)
WEIGHT	Gross weight		lbs (kg)	68,000 (30,800)
POWER	Engine model		Cummins	QSB 6.7 (Stage V)
	Max. engine power		hp (kW)/rpm	280 (209)/2,200
	Max. engine torque		lb·ft (N·m)/rpm	950 (1,288)/1,500
DIMENSIONS	Overall length		ft (mm)	41.34 (12,600)
	Overall width		ft (mm)	9.19 (2,800)
	Overall height		ft (mm)	11.75 (3,580)
TRAVEL	Max.travel speed		mph (km/h)	15 (1.61)
	Wheel formula		-	2 wheel; 4 wheel
	Min.ground clearance		ft (mm)	15 (380)
	Approach angle		°	23
	Departure angle		°	21
	Max.gradeability		-	83%
MAIN PERFORMANCE	Working temperature range		°F (°C)	-4~+114.8 (-20~+46)
	Min.rated lifting radius		ft (m)	8 (2.44)
	Tail slewing radius		ft (m)	13.58 (4.14)
	Boom sections (Qty.)		-	4
	Boom Type		-	U shape
	Max.lifting moment	Basic boom	lb·ft (kN·m)	732,000 (992)
		Full-extension boom	lb·ft (kN·m)	504,000 (683)
		Full-extension boom+jib	lb·ft (kN·m)	228,100 (309)
	Boom length	Basic boom	ft (m)	35.4 (10.8)
		Full-extension boom	ft (m)	114.8 (35)
		Full-extension boom + jib	ft (m)	167.3 (51)
	Max.tip height	Basic boom	ft (m)	37.7 (11.5)
		Full-extension boom	ft (m)	115.8 (35.3)
		Full-extension boom + jib	ft (m)	176 (53.6)
	Outrigger span (Longitudinal×Transverse)		ft×ft (m×m)	22.3 (6.8) × 22.3 (6.8)
	Jib offset		°	0, 20, 40
Air conditioner	In operator's cab		-	Heating & Cooling

In the interest of continual equipment development, SANY America Inc. reserves the right to change these specifications at any time without prior notification.

TECHNICAL PARAMETERS

Hook

Capacity / USt (Mt)	Number of sheaves	Parts of line	Hook weight /lbs (kg)
35 (32)	3	7	630 (286)
5 (4.5)	/	1	176 (80)

Operations

Item		Max.single rope lifting speed (empty load)	Rope diameter/length	Max. single line pull
Main winch		436 ft (133 m)/min	0.59" (Φ15 mm) / 623 ft (190 m)	9,650 lbs (4,380 kg)
Auxiliary winch		436 ft (133 m)/min	0.59" (Φ15 mm) / 361 ft (110 m)	9,650 lbs (4,380 kg)
Swing speed		2.25 r / min		
Full luffing up/down time of boom		40 s / 45 s		
Full extension/retraction time of boom		30 s / 45 s		
Outrigger beam	Extension	19 s		
	Retraction	10 s		
Outrigger jack	Extension	20 s		
	Retraction	15 s		

Hoist Performance

Wire Rope Layer	Hoist Line Pulls (lb)	Drum Capacity (ft)	
		Layer	Total
1	15,000	128	128
2	13,900	138	266
3	13,000	148	413
4	12,100	157	571
5	11,400	167	738

CRANE INTRODUCTION

Frame

- Turntable and carrier frame are made of high strength steel, with anti-torsion large cross-section, featuring heavy load-bearing capacity.

Outrigger

- 4 outriggers, H-type arrangement, controlled by electrically and hydraulically and located at both sides of chassis frame.

Engine

- Cummins, inline six-cylinder water-cooled compression ignition diesel engine, rated power 280 hp / 2,200 rpm, max. torque 950 lb·ft / 1,500 rpm, off-road Stage V emission standards.
- Fuel tank capacity: Approx. 92.46 gal.

Hydraulic System

- The constant variable displacement pump is connected to the transmission through PTO for controlling the operation of crane.

Gearbox

- Auto-transmission, 6 forward speeds and 3 reverse speeds, large speed ratio range, adaptable to slope climbing and high-speed traveling.

Axles

- Two axle chassis of flexible maneuverability, four-wheel drive, excellent dynamic performance.

Suspension

- Front axle is connected with frame rigidly; hydraulic suspension is used for rear axle. Road shock is buffered and travel smoothness is improved when driving on roads. The rear suspension cylinder may be locked to rigid state so as to meet the requirement for travel with a load suspended.

Tires

- 4 tires, each axle is equipped with single tire.
- Tire specifications: 20.5R25.

Steering

- Four modes: Two wheel front, four wheel, crab, two wheel rear.

Brakes

- Service brake: Dual-circuit hydraulic disc brake, acting on all wheels.
- Parking brake: Front wheels.

Main Winch System

- Driven by a hydraulic motor, with built-in planetary gear reducer, constantly closed brake and ϕ0.59" (15 mm) rotation-resistant wire rope equipped.

Swing System

- Single-row four-point ball contact swing ring, driven by hydraulic motor through planetary gear reducer.

Boom

- 1 basic boom and 3 telescoping sections, U-shape cross section welding structure. Single cylinder with rope pull mechanism for synchronous telescoping.
- 4 sheaves on boom head are standard.
- Boom length: 35.4' (10.8 m)~114.8' (35 m).

Safety Devices

- Hydraulic balance valve, hydraulic relief valve, hydraulic two-way valve and LMI.
- Third-wrap indicator is equipped for both winches to prevent rope overreleasing. Anti-two block limit switch is fitted on the boom head to prevent rope over-winding.

Counterweight

- Fixed counterweight, total weight is 8,800 lbs (4 t).

Electrical System

- DC 24 volts are in series with two 12-volt battery packs.

Optional Equipment at Extra Fees

- Spark arrester / Air intake shutoff valve

BOOM & JIB COMBINATIONS

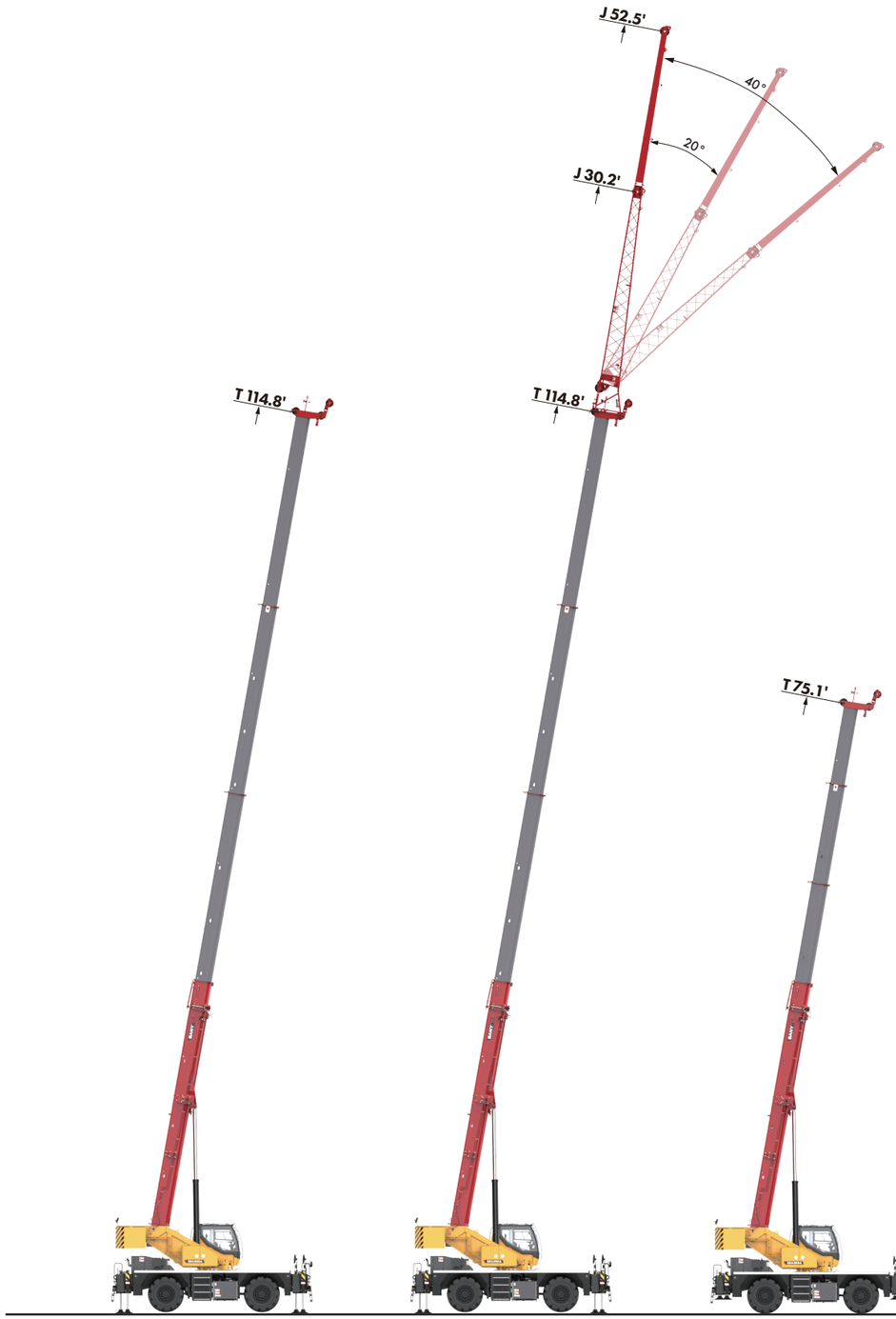

Main Boom On Outriggers **Fly Jib On Outriggers** **Main Boom On Tires**

WORKING RANGE DIAGRAM — Main Boom

Lifting capacities in klb

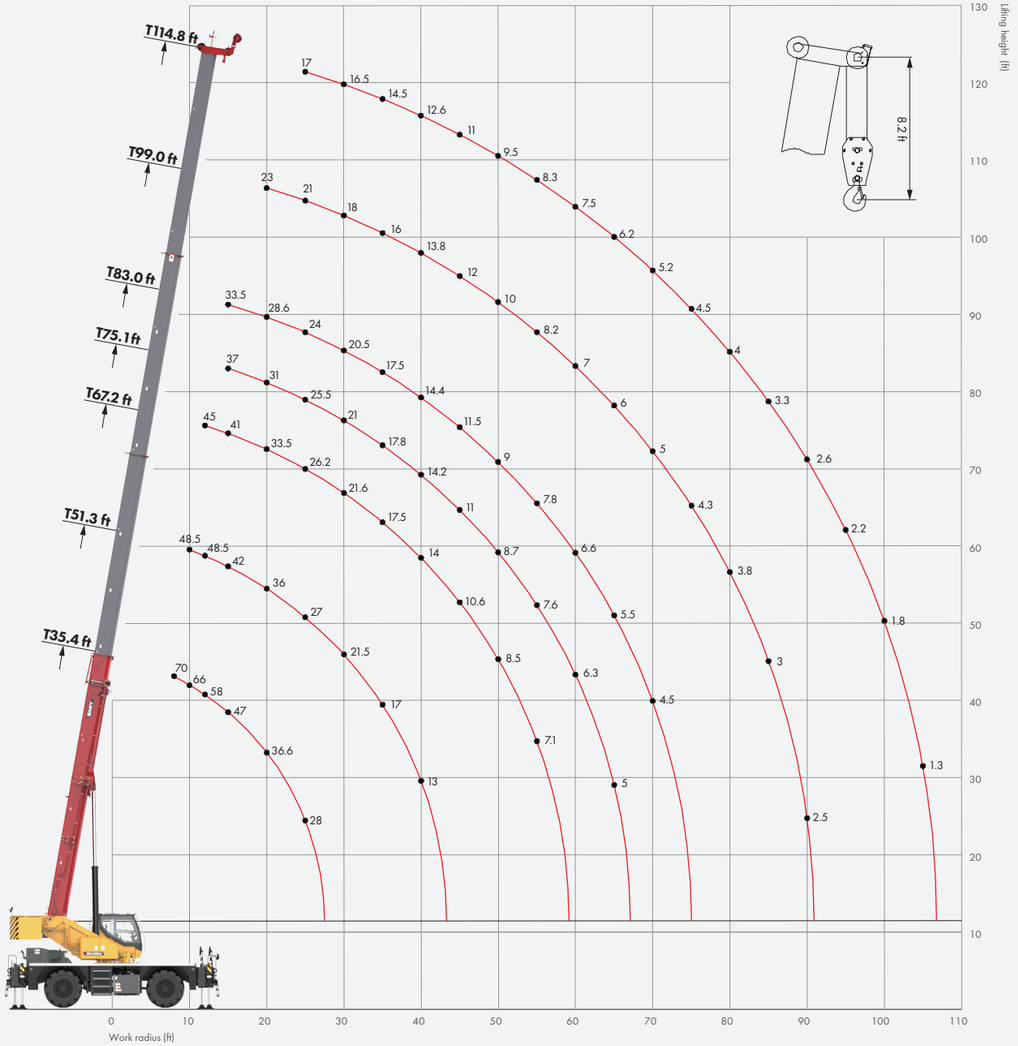

LOAD CHARTS — Main Boom, On 100% Outriggers, 360°

T | 100% (22.31') | 360° | 8,800 lbs | ASME

Unit: lbs

ft	35.4' (10.8 m)	51.3' (15.6 m)	67.2' (20.5 m)	75.1' (22.9 m)	83.0' (25.3 m)	99.0' (30.2 m)	114.8' (35.0 m)	ft
8	70,000							8
10	66,000	48,500						10
12	58,000	48,500	45,000					12
15	47,000	42,000	41,000	37,000	33,500			15
20	36,600	36,000	33,500	31,000	28,600	23,000		20
25	28,000	27,000	26,200	25,500	24,000	21,000	17,000	25
30		21,500	21,600	21,000	20,500	18,000	16,500	30
35		17,000	17,500	17,800	17,500	16,000	14,500	35
40		13,000	14,000	14,200	14,400	13,800	12,600	40
45			10,600	11,000	11,500	12,000	11,000	45
50			8,500	8,700	9,000	10,000	9,500	50
55			7,100	7,600	7,800	8,200	8,300	55
60				6,300	6,600	7,000	7,500	60
65				5,000	5,500	6,000	6,200	65
70					4,500	5,000	5,200	70
75						4,300	4,500	75
80						3,800	4,000	80
85						3,000	3,300	85
90						2,500	2,600	90
95							2,200	95
100							1,800	100
105							1,300	105
%	0	20	40	50	60	80	100	%
n	8	6	6	6	4	4	4	n
Min	0	0	0	0	0	0	0	Min
Min lbs	22,000	10,000	5,500	3,500	2,500	1,500	1,000	Min lbs

LOAD CHARTS — Main Boom, On 50% Outriggers, 360°

Unit: lbs

ft	35.4' (10.8 m)	51.3' (15.6 m)	67.2' (20.5 m)	75.1' (22.9 m)	83.0' (25.3 m)	99.0' (30.2 m)	114.8' (35.0 m)	ft
8	70,000							8
10	60,000	45,000						10
12	56,500	45,000	43,000					12
15	46,500	40,000	38,000	32,000	30,000			15
20	28,000	28,000	28,000	27,500	26,500	21,000		20
25	17,500	18,500	18,000	20,000	19,500	17,500	15,200	25
30		13,000	13,000	14,000	14,000	14,000	13,200	30
35		10,000	10,500	11,000	11,500	12,000	11,000	35
40		7,000	8,000	8,000	8,500	8,500	8,800	40
45			6,000	6,500	6,700	6,800	7,000	45
50			5,000	5,000	5,500	5,800	6,000	50
55			3,800	4,000	4,300	4,500	4,500	55
60				3,300	3,500	3,500	3,800	60
65				2,200	2,400	2,600	2,900	65
70					2,000	2,200	2,500	70
75						1,500	2,000	75
80							1,400	80
%	0	20	40	50	60	80	100	%
n	8	6	6	4	4	4	4	n
Min	0	0	0	0	0	32	40	Min
Min lbs	10,000	4,500	2,500	1,500	1,100	1,000	1,000	Min lbs

LOAD CHARTS — Main Boom, On 0% Outriggers, 360°

Unit: lbs

ft	35.4' (10.8 m)	51.3' (15.6 m)	67.2' (20.5 m)	75.1' (22.9 m)	83.0' (25.3 m)	99.0' (30.2 m)	114.8' (35.0 m)	ft
8	45,000							8
10	35,000	35,000						10
12	30,000	31,000	28,000					12
15	20,000	21,000	22,000	22,000	22,000			15
20	10,000	13,000	13,300	13,500	14,000	14,000		20
25	6,500	8,100	8,300	8,500	8,800	9,000	9,200	25
30		5,200	5,500	5,800	6,100	6,400	6,600	30
35		3,500	3,800	4,200	4,500	4,800	5,000	35
40		2,200	2,500	2,700	3,000	3,200	3,400	40
45			1,800	2,000	2,000	2,200	2,300	45
50				1,300	1,500	1,500	1,600	50
%	0	20	40	50	60	80	100	%
n	6	4	4	4	4	4	4	n
Min	0	0	38	40	45	53	60	Min
Min lbs	4,000	1,200	1,200	1,200	1,200	1,200	1,200	Min lbs

Remark
1. Load capacity in the chart is the maximum weight which this crane could hoist include the hook block's weight.
2. Radius shown in the chart is the actual radius when loading.
3. The load capacity in the chart is the maximum weight when this crane is supported with the firm ground and stays in level.
4. Choose rated load capacity of the longer boom and radius when the actual boom length and radius are between two values in the charts.
5. The machine can be used only when the wind scale is less than 6.

Operator must refer to in-cab load chart manual for crane operation.
In the interest of continual equipment development, SANY America Inc. reserves the right to change these specifications at any time without prior notification.

LOAD CHARTS — Main Boom, Stationary, On Tires, Over Front Tires

Unit: lbs

ft	35.4' (10.8 m)	51.3' (15.6 m)	67.2' (20.5 m)	75.1' (22.9 m)	ft
10	34,000	30,800			10
12	30,000	28,500	25,000		12
15	25,000	22,500	20,000	22,000	15
20	17,000	16,500	16,000	16,000	20
25	11,000	11,500	12,000	13,000	25
30		8,500	8,500	8,800	30
35		6,000	6,500	6,000	35
40		4,000	4,500	4,000	40
45			3,400	3,500	45
50			2,500	2,800	50
55			1,800	2,000	55
60				1,500	60
%	0	20	40	50	%
n	4	4	4	4	n
Min	0	0	0	25	Min
Min lbs	5,000	2,000	1,500	1,000	Min lbs

LOAD CHARTS — Main Boom, Stationary, On Tires, 360°

Unit: lbs

ft	35.4' (10.8 m)	51.3' (15.6 m)	67.2' (20.5 m)	75.1' (22.9 m)	ft
10	23,000				10
12	18,000	18,000			12
15	13,000	13,500	15,000	15,000	15
20	8,000	8,500	10,000	12,000	20
25	4,200	6,000	7,000	8,000	25
30		3,500	4,800	5,500	30
35		2,200	3,200	3,500	35
40			2,000	2,500	40
%	0	20	40	50	%
n	4	4	4	4	n
Min	0	35	45	50	Min
Min lbs	2,000	1,500	1,500	1,500	Min lbs

LOAD CHARTS — Main Boom, Pick & Carry, On Tires, Over Front Tires

Unit: lbs

ft	35.4' (10.8 m)	51.3' (15.6 m)	67.2' (20.5 m)	75.1' (22.9 m)	ft
10	23,000	21,000			10
12	20,000	19,000	18,000		12
15	15,000	16,000	16,500	17,000	15
20	11,000	12,000	13,000	13,500	20
25	8,000	8,200	8,500	9,000	25
30		5,500	6,500	7,000	30
35		4,000	4,500	5,000	35
40		2,500	3,400	4,000	40
45			2,500	3,000	45
50			1,800	2,000	50
55			1,200	1,500	55
%	0	20	40	50	%
n	4	4	4	4	n
Min	0	0	22	30	Min
Min lbs	4,000	1,500	1,000	1,000	Min lbs

Remark
1. Capacities are applicable at 80 psi (560 kPa) cold tire inflation pressure.
2. Capacities are applicable only with machine on firm level surface.
3. On tire lifting with the jib mounted is not permitted.
4. Axle lockouts must be applied when lifting on tires.
5. Parking brake must be applied when lifting on tires stationary.
6. Driving speed shall be less than 2.49 mph (4km/h) at pick & carry mode.

Operator must refer to in-cab load chart manual for crane operation.
In the interest of continual equipment development, SANY America Inc. reserves the right to change these specifications at any time without prior notification.

WORK RANGE DIAGRAM — Fly Jib

Lifting capacities in klb

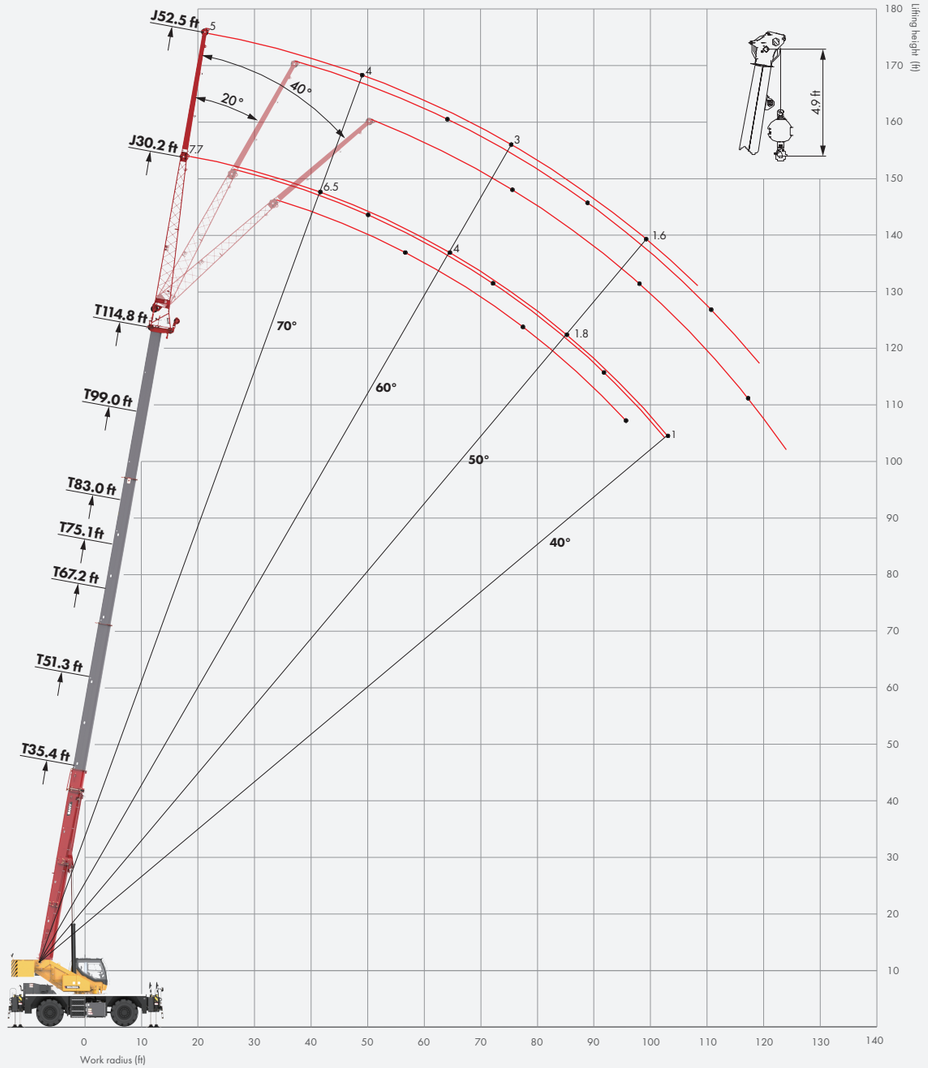

LOAD CHARTS — Fly Jib

T | J | 100% (22.31') | 360° | 8,800 lbs | ASME

Unit: lbs

ft	114.8' (35 m) boom +30.2' (9.2 m) jib						114.8' (35 m) boom + 52.5' (16 m) jib						ft
	0°		20°		40°		0°		20°		40°		
	ft	lbs	ft	lbs	ft	lbs	ft	lbs	ft	lbs	ft	lbs	
80	17.7	7,700	27.6	5,500	35.6	4,000	21.5	5,000	38.6	3,500	52.4	2,200	80
78	22.7	7,500	32.4	5,000	40.2	3,600	27.3	4,900	44.1	3,000	57.5	2,200	78
76	27.6	7,300	37.2	4,800	44.8	3,500	32.9	4,800	49.5	3,000	62.5	2,100	76
74	32.5	7,000	41.9	4,500	49.2	3,400	38.6	4,400	54.8	2,700	67.4	2,100	74
72	37.4	6,800	46.6	4,200	53.6	3,300	44.1	4,200	60.1	2,600	72.3	2,000	72
70	42.1	6,500	51.2	4,000	58.0	3,200	49.7	4,000	65.3	2,500	77.0	1,950	70
68	46.9	6,000	55.8	3,800	62.2	3,100	55.1	3,800	70.5	2,400	81.6	1,900	68
66	51.5	5,500	60.2	3,600	66.4	3,000	60.5	3,600	75.5	2,300	86.1	1,850	66
64	56.1	5,000	64.6	3,400	70.5	2,900	65.7	3,400	80.4	2,200	90.5	1,800	64
62	60.6	4,500	68.9	3,000	74.4	2,800	70.9	3,200	85.2	2,200	94.8	1,750	62
60	65.1	4,000	73.1	2,700	78.3	2,700	76.0	3,000	89.9	2,100	99.0	1,700	60
58	69.4	3,200	77.2	2,500	82.1	2,600	81.0	2,800	94.5	2,000	103.0	1,650	58
56	73.6	2,500	81.2	2,200	85.8	2,500	85.9	2,400	98.9	1,800	106.9	1,600	56
54	77.8	2,200	85.1	2,000	89.3	2,200	90.7	2,100	103.3	1,700	110.6	1,550	54
52	81.8	2,000	88.8	1,800	92.8	2,000	95.3	1,900	107.5	1,500	114.2	1,300	52
50	85.8	1,800	92.5	1,600	96.1	1,800	99.9	1,600	111.5	1,400	117.7	1,200	50
48	89.6	1,700	96.0	1,400	99.3	1,500	104.3	1,500	115.4	1,200	121.0	1,100	48
46	93.3	1,500	99.4	1,300	102.3	1,200	108.5	1,400	119.2	1,100	124.2	1,000	46
44	96.9	1,300	102.7	1,200			112.7	1,200					44
42	100.3	1,100	105.9	1,000			116.6	1,100					42
40	103.6	1,000	108.9	900			120.5	1,000					40
Min	39	39	39	39	45	45	39	39	45	45	45	45	Min

Remark

1. The capacities listed are with the outriggers fully extended and vertical jacks properly set only.
2. The fly jib may only be used for single line lifting service.
3. Use only the load which corresponds to the boom extension length and offset angle as the machine is configured.
4. For boom angles not shown, use the rating of the next lower boom angle.
5. The boom angle is defined as the angle above or below the horizontal line of the longitudinal axis of the boom base section after lifting the rated load.
6. When lifting over the main boom nose with the fly jib erected, the outriggers must be fully extended and the proper load reduction must be used.
7. Do not lower the boom below the minimum boom angle with the jib erected. Fully retract the boom to lower the boom below the minimum boom angle.

Operator must refer to in-cab load chart manual for crane operation.

In the interest of continual equipment development, SANY America Inc. reserves the right to change these specifications at any time without prior notification.

NOTES

NOTES



SANY America Inc.
318 SANY Way
Peachtree City | GA 30269
| T | 470-552-SANY

BRCRA26SRA350A

sanyamerica.com

In the interest of continual equipment development, SANY America Inc. reserves the right to change these specifications at any time without prior notification.

© 2026 SANY AMERICA INC.